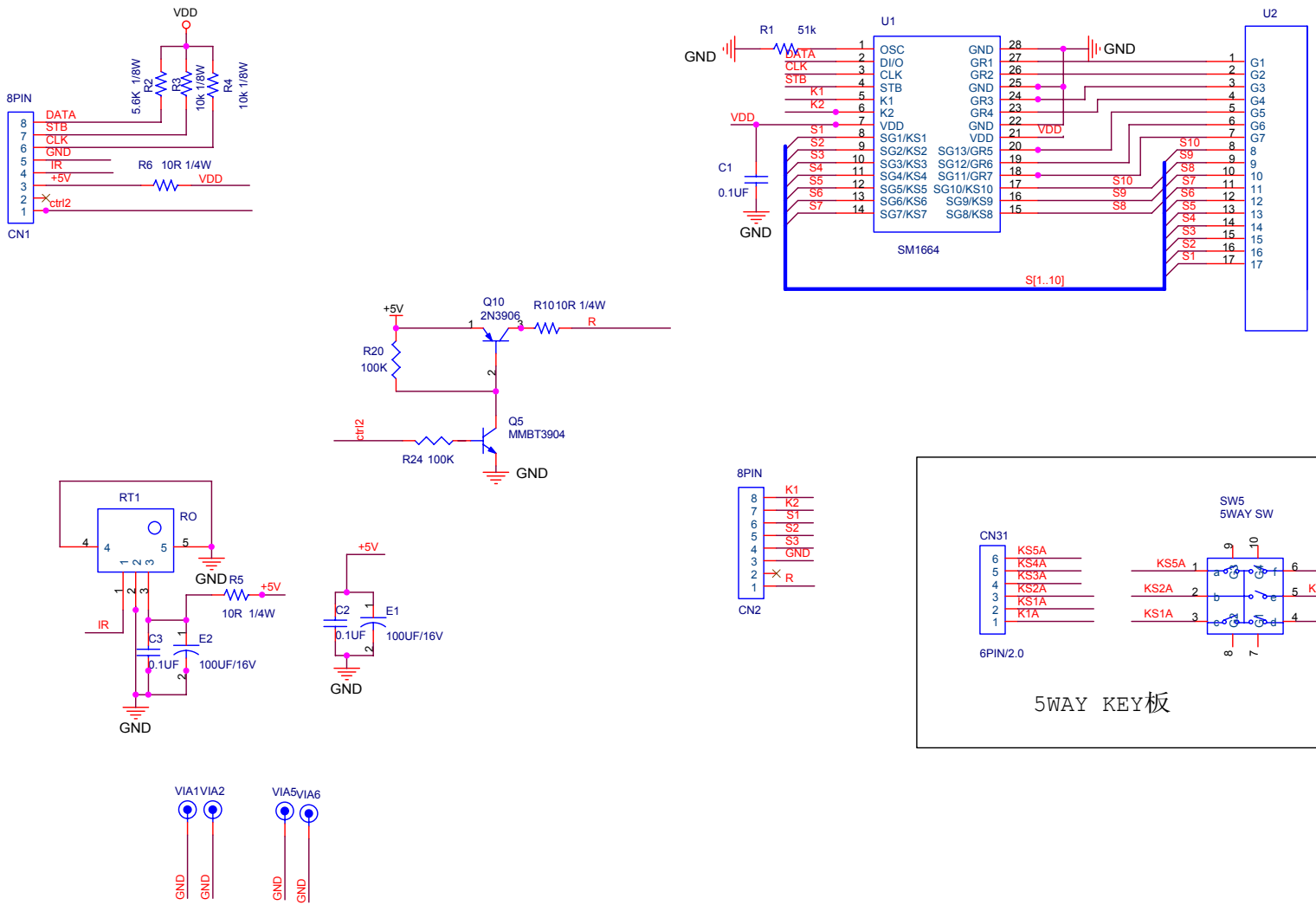

Title	做7个8LED屏		
Size B	Document Number		Rev 1.0
Date: Tuesday, November 27, 2007		Sheet 1 of 1	